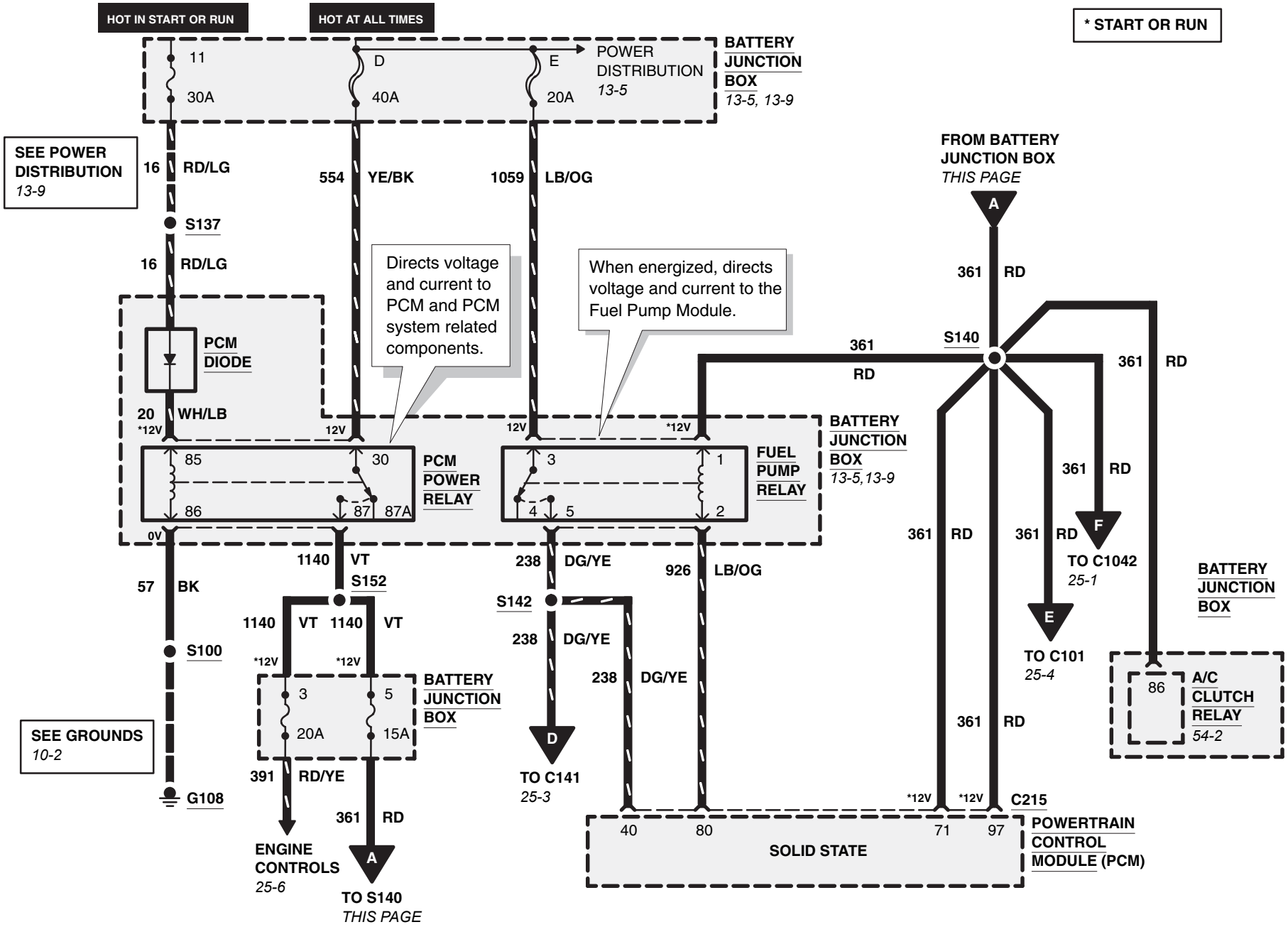
HOT IN START OR RUN
HOT AT ALL TIMES
* START OR RUN
11
30A
D
40A
E
20A
POWER DISTRIBUTION 13-5
BATTERY JUNCTION BOX 13-5, 13-9
SEE POWER DISTRIBUTION 13-9
16 RD/LG
554 YE/BK
1059 LB/OG
S137
16 RD/LG
Directs voltage and current to PCM and PCM system related components.
When energized, directs voltage and current to the Fuel Pump Module.
FROM BATTERY JUNCTION BOX THIS PAGE
A
361 RD
S140
361 RD
361 RD
PCM DIODE
20 WH/LB
*12V
12V
12V
*12V
85
30
86
87
87A
PCM POWER RELAY
3
1
4
5
2
FUEL PUMP RELAY
BATTERY JUNCTION BOX 13-5,13-9
361 RD
0V
1140 VT
S152
238 DG/YE
926 LB/OG
361 RD
361 RD
F
TO C1042 25-1
BATTERY JUNCTION BOX
57 BK
S142
1140 VT
1140 VT
238 DG/YE
E
TO C101 25-4
S100
*12V
*12V
3
5
20A
15A
BATTERY JUNCTION BOX
238 DG/YE
86
A/C CLUTCH RELAY 54-2
SEE GROUNDS 10-2
D
TO C141 25-3
361 RD
391 RD/YE
G108
361 RD
*12V
*12V
C215
40
80
71
97
SOLID STATE
POWERTRAIN CONTROL MODULE (PCM)
ENGINE CONTROLS 25-6
A
TO S140 THIS PAGE