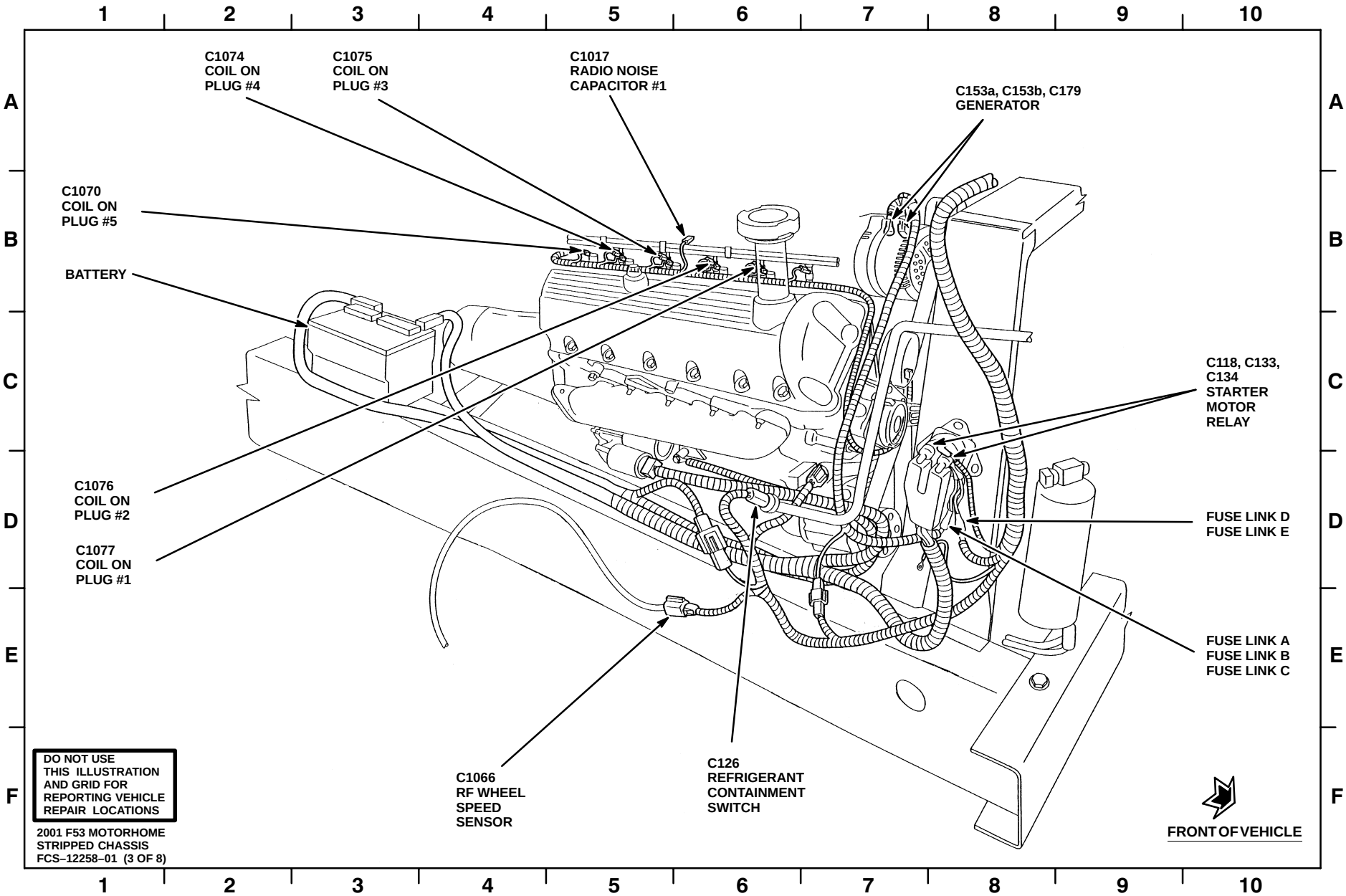

ENGINE SENSORS WIRING ASSEMBLY (3 OF 4)